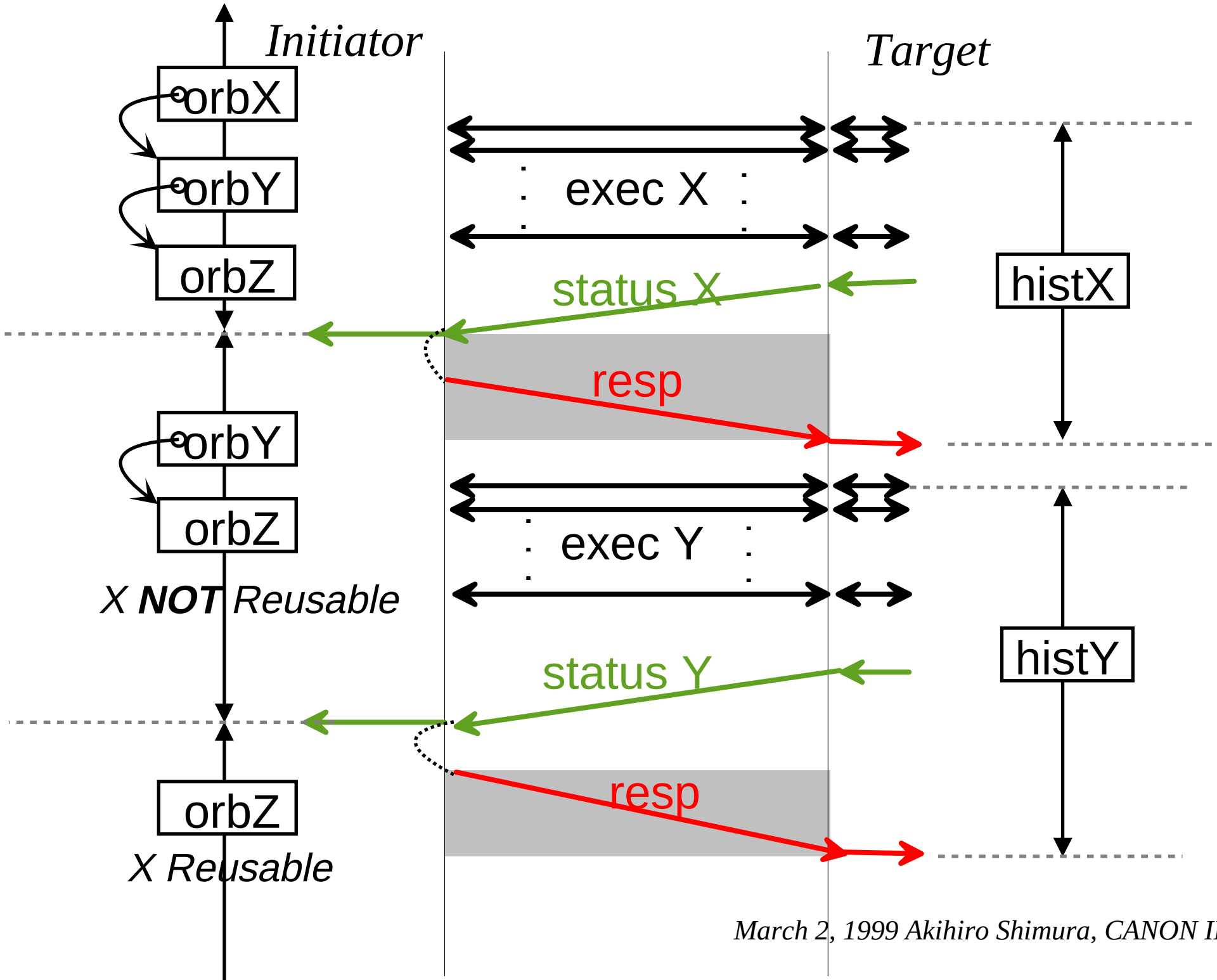
Initiator
Target
orbX
orbY
orbZ
exec X
status X
resp
histX
orbY
orbZ
exec Y
X NOT Reusable
status Y
histY
resp
orbZ
X Reusable

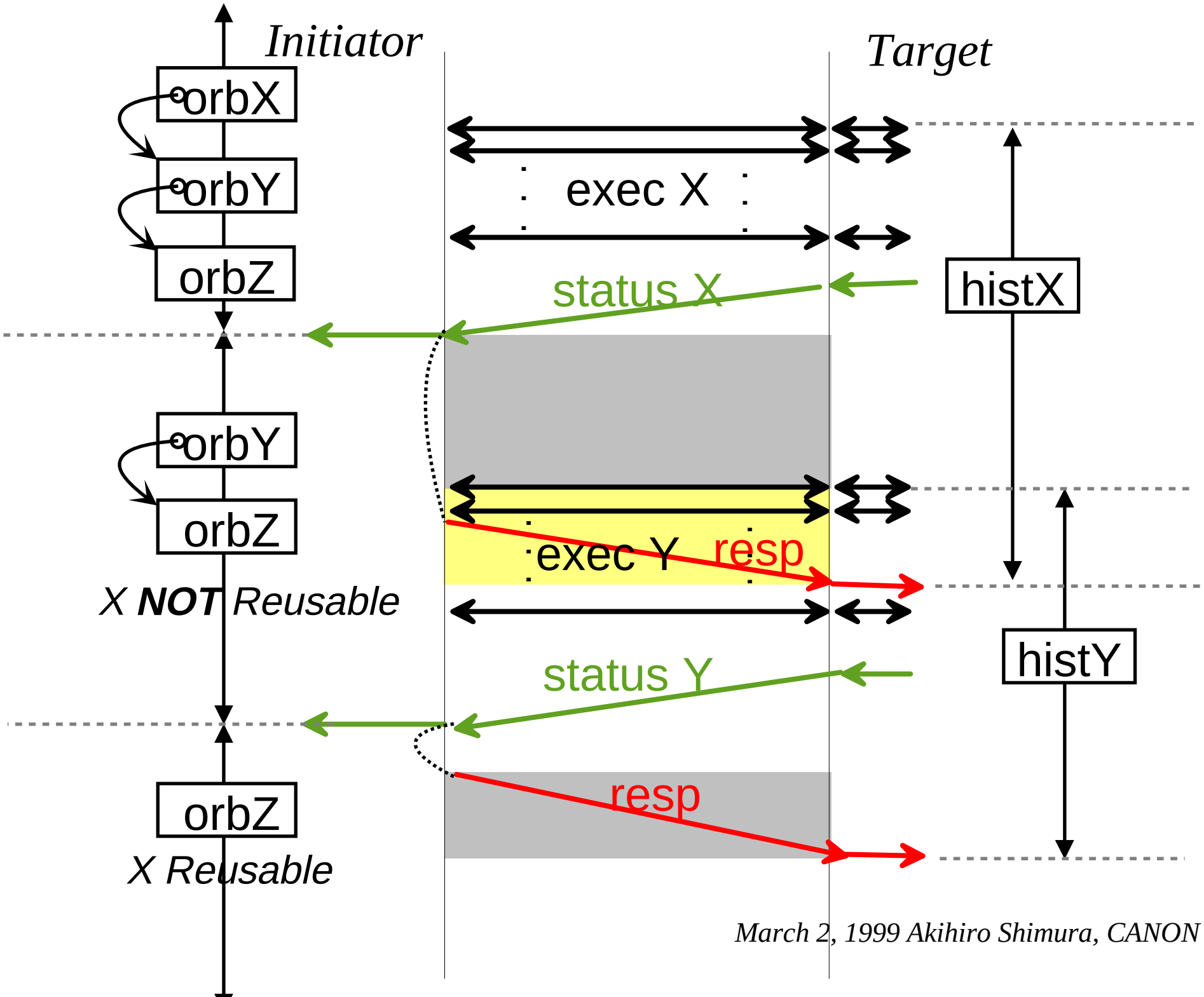
Initiator
Target
orbX
orbY
orbZ
exec X
status X
histX
orbY
orbZ
exec Y
resp
X NOT Reusable
status Y
histY
orbZ
resp
X Reusable